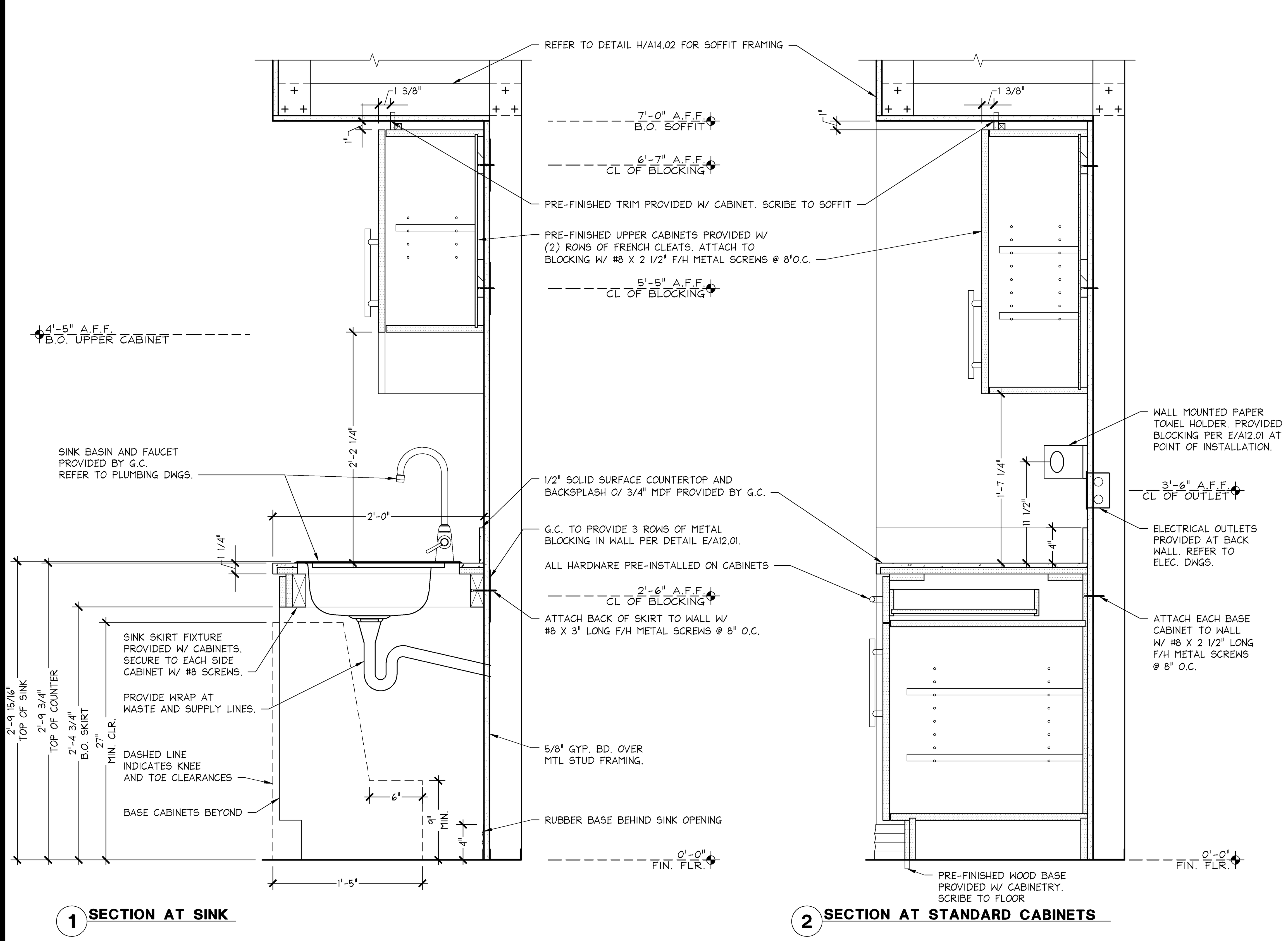

BREAK ROOM CABINET SECTION — 1 1/2" = 1'-0" — L — 05D-A1402-L00-DETL — 01.16.14

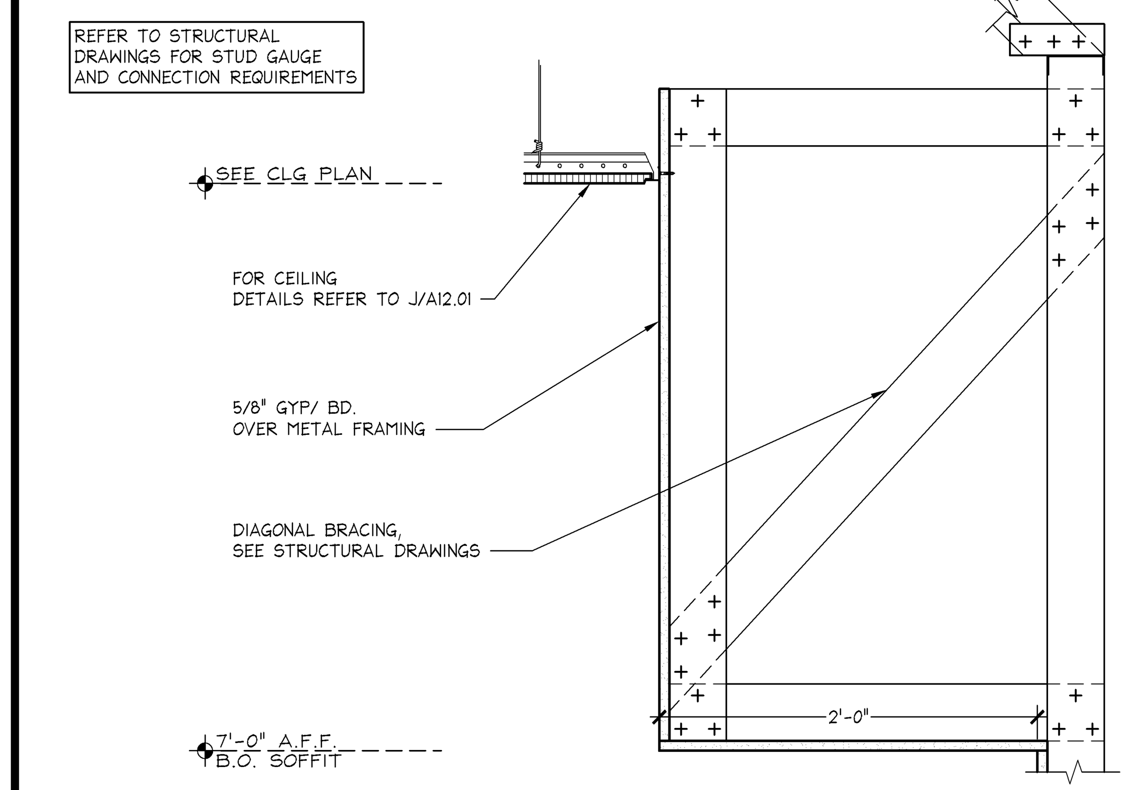

BREAK ROOM SOFFIT — 1 1/2" = 1'-0" — H — 05D-A1402-H00-DETL — 09.09.13

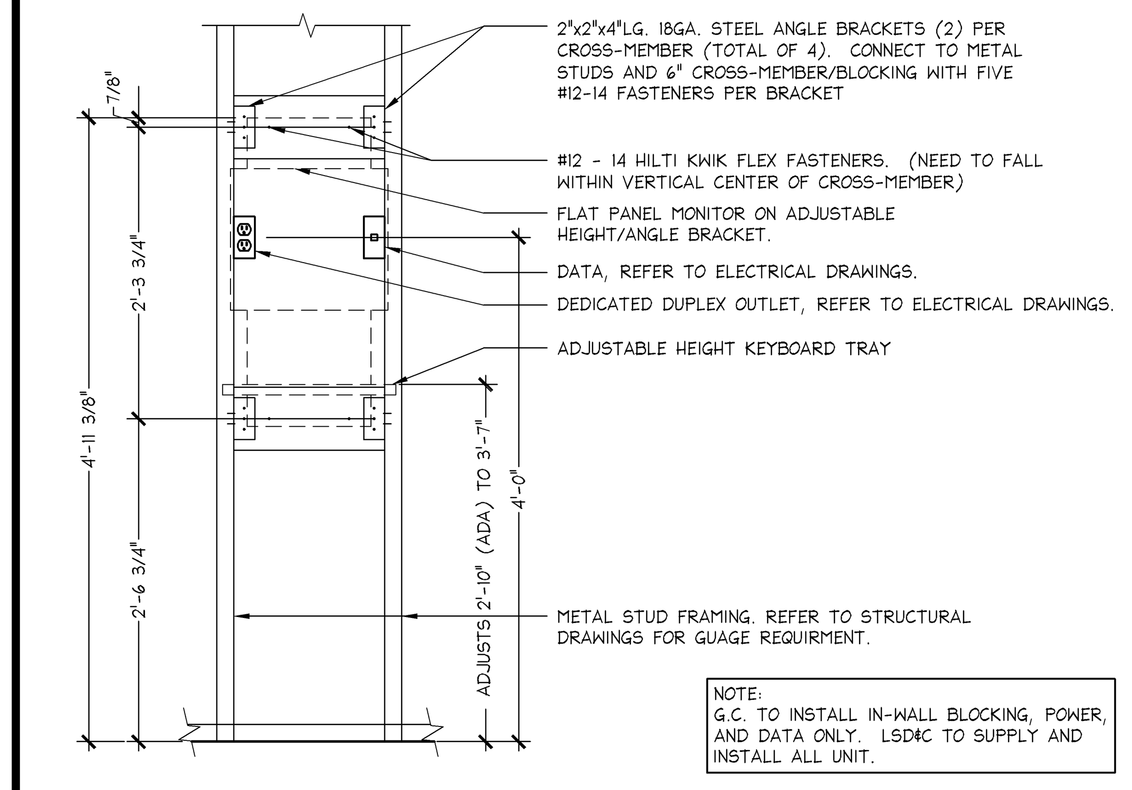

ALL UNIT MOUNTING DETAIL — 1" = 1'-0" — D — 05D-A1402-D00-DETL — 05.23.13

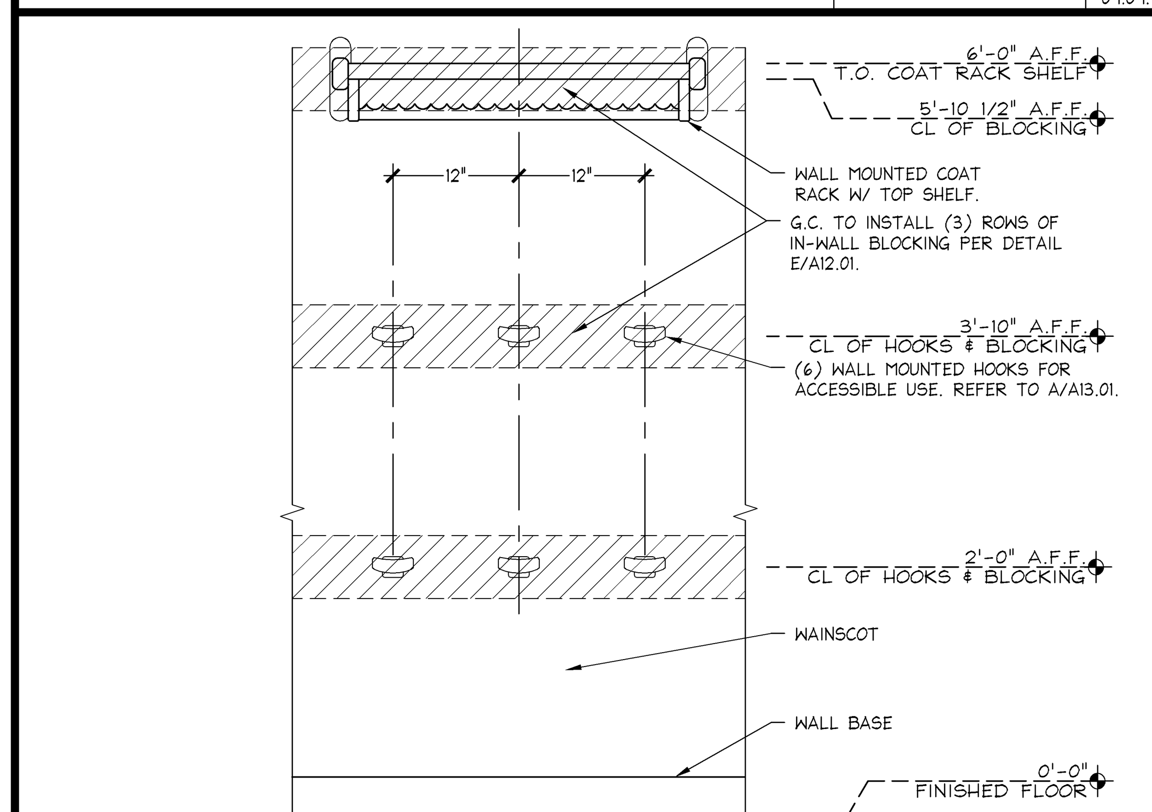

COAT RACK MOUNTING DETAIL — 1" = 1'-0" — G — 05D-A1402-G00-DETL — 08.09.13

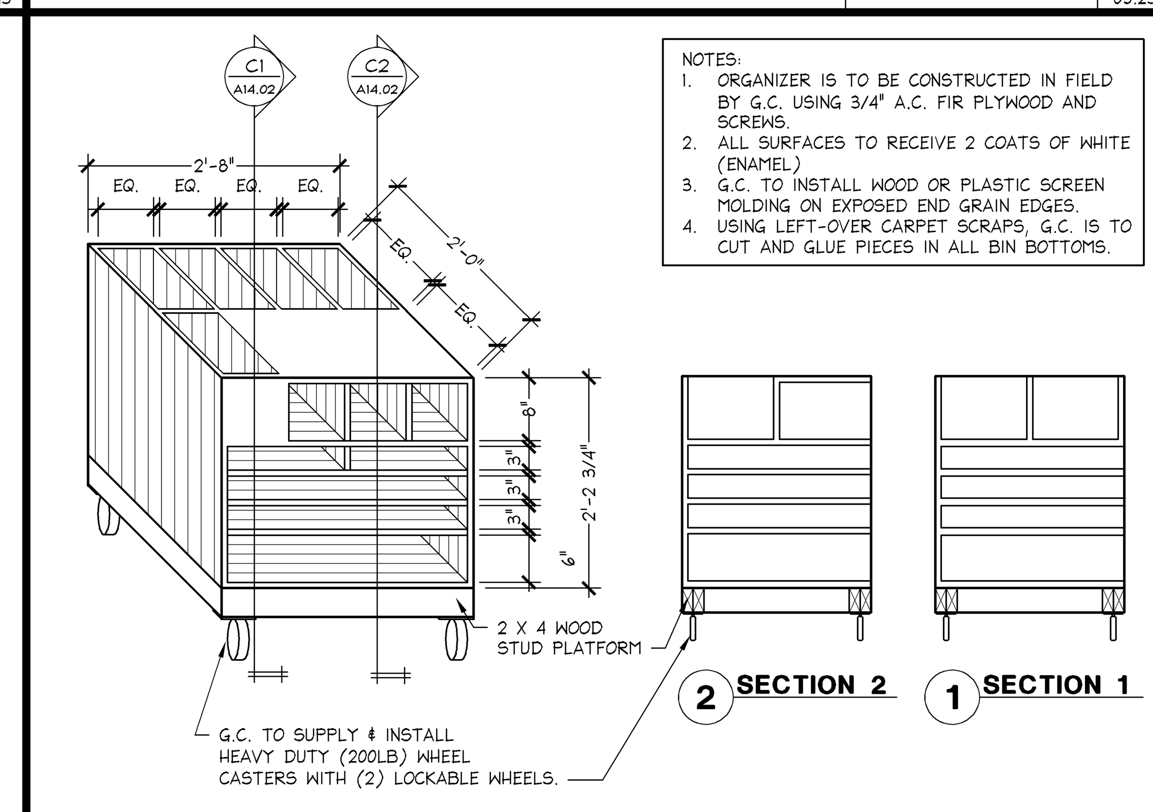

MARKETING STORAGE BIN - PINK — 3/4" = 1'-0" — C — 05D-A1402-C00-DETL — 09.09.13

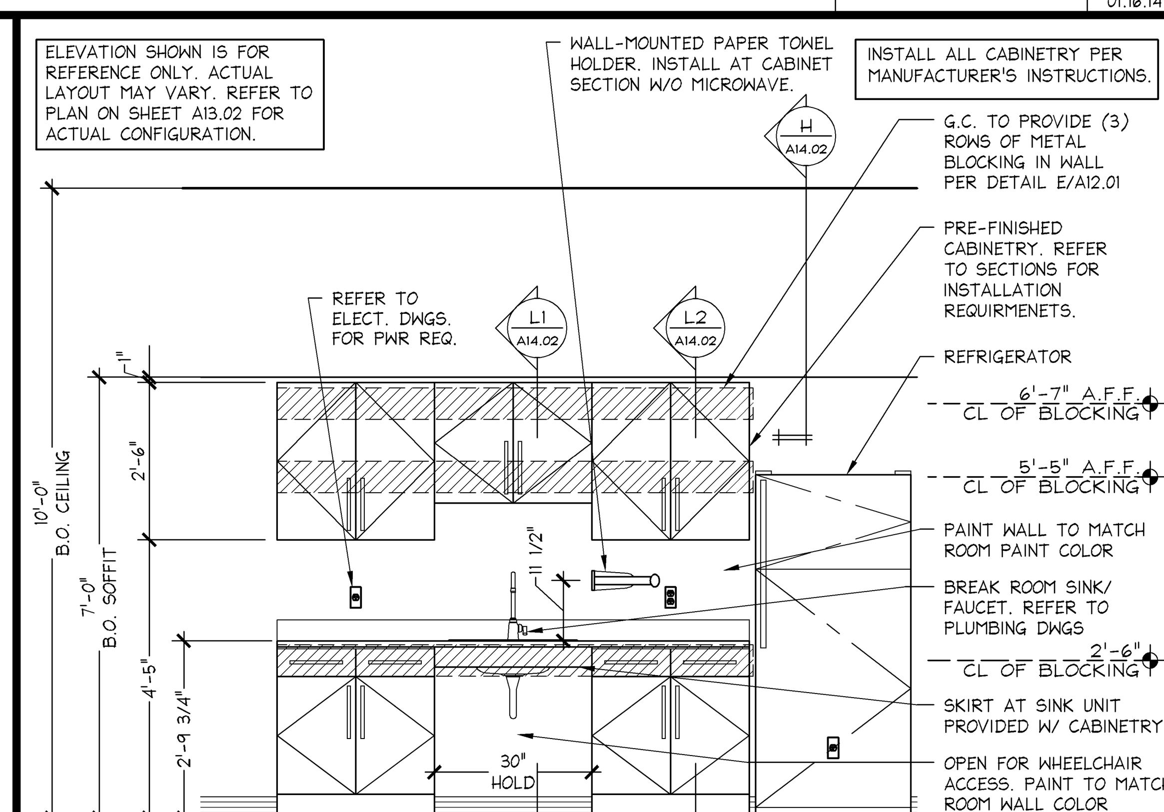

BREAK ROOM CABINETRY — 1/2" = 1'-0" — K — 05D-A1402-K00-DETL — 02.21.14

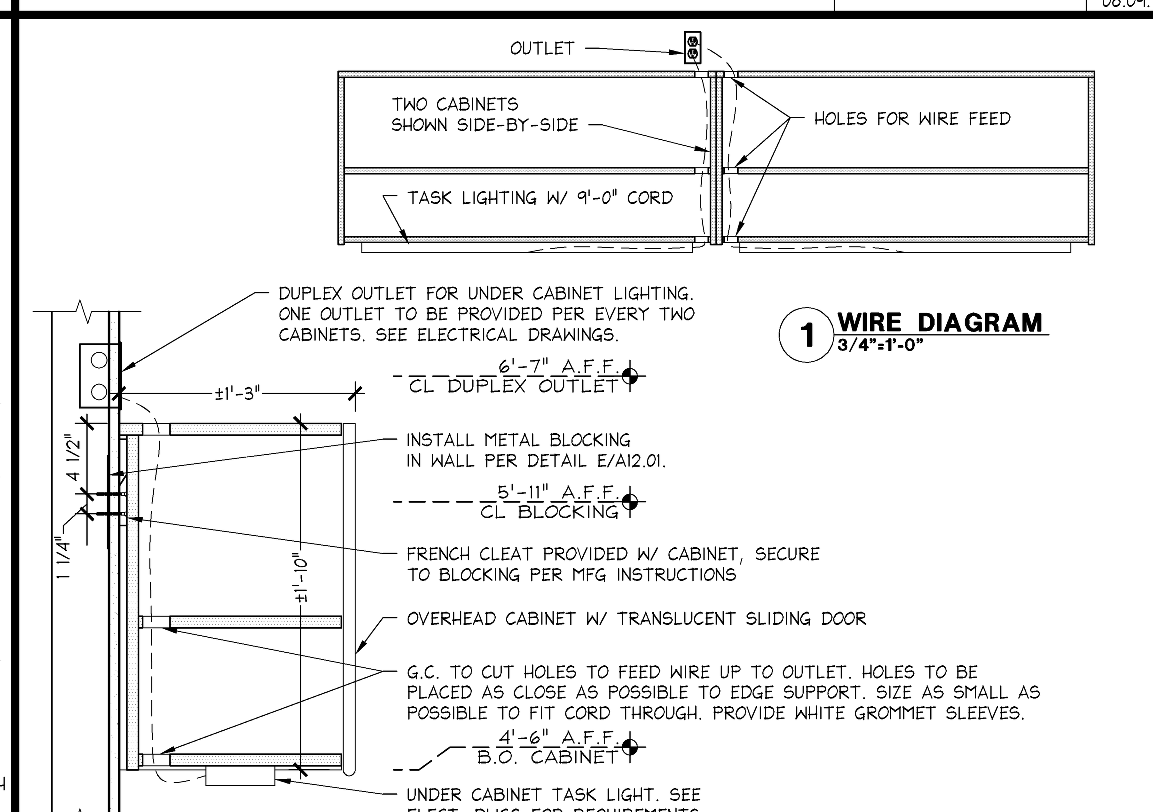

OFFICE OVERHEAD CABINET — 1 1/2" = 1'-0" — F — 05D-A1402-F00-DETL — 09.09.13

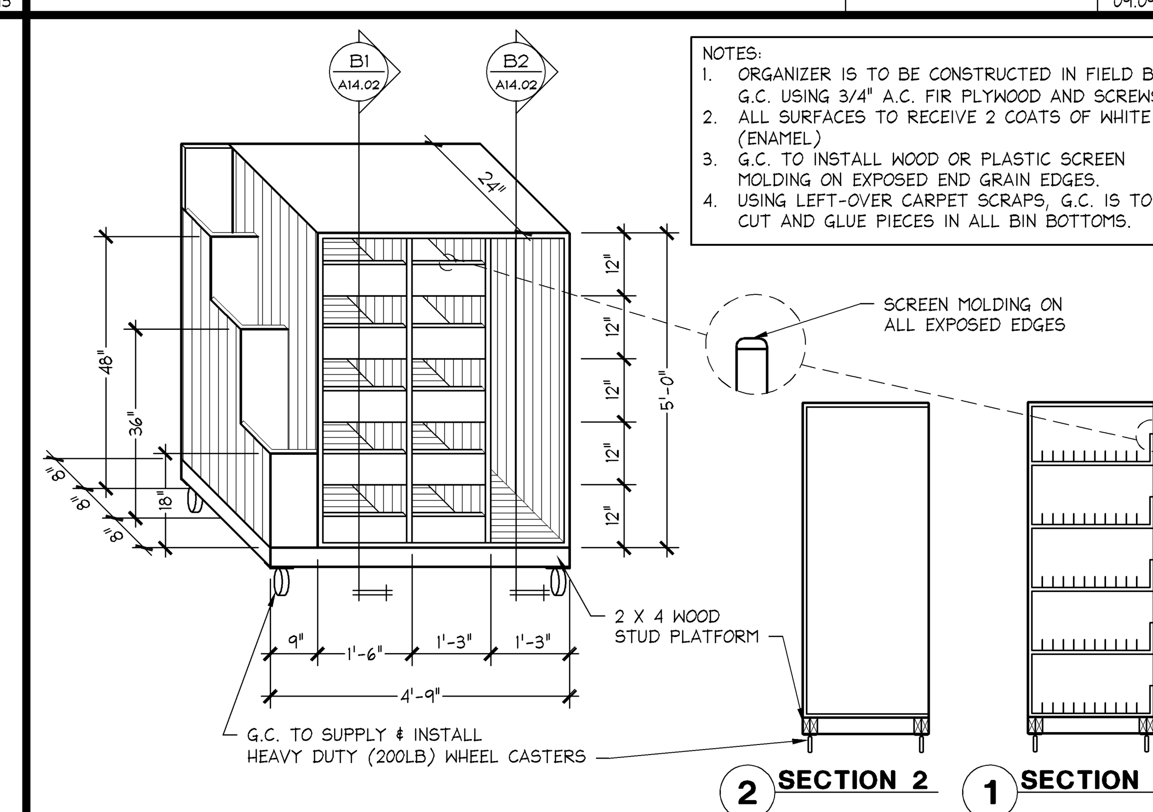

HARDWARE STORAGE BIN — 1/2" = 1'-0" — B — 05D-A1402-B00-DETL — 09.09.13

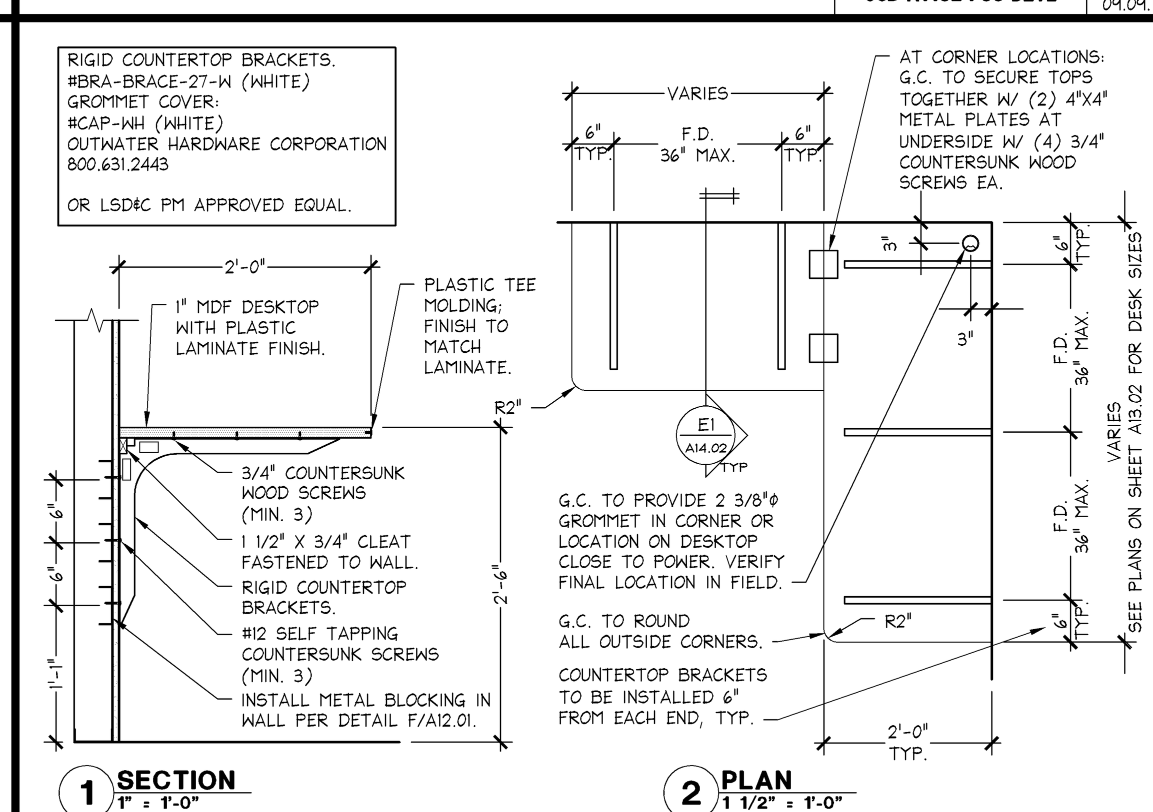

DESK MOUNTING DETAIL — VARIES — E — 05D-A1402-E00-DETL — 05.09.14

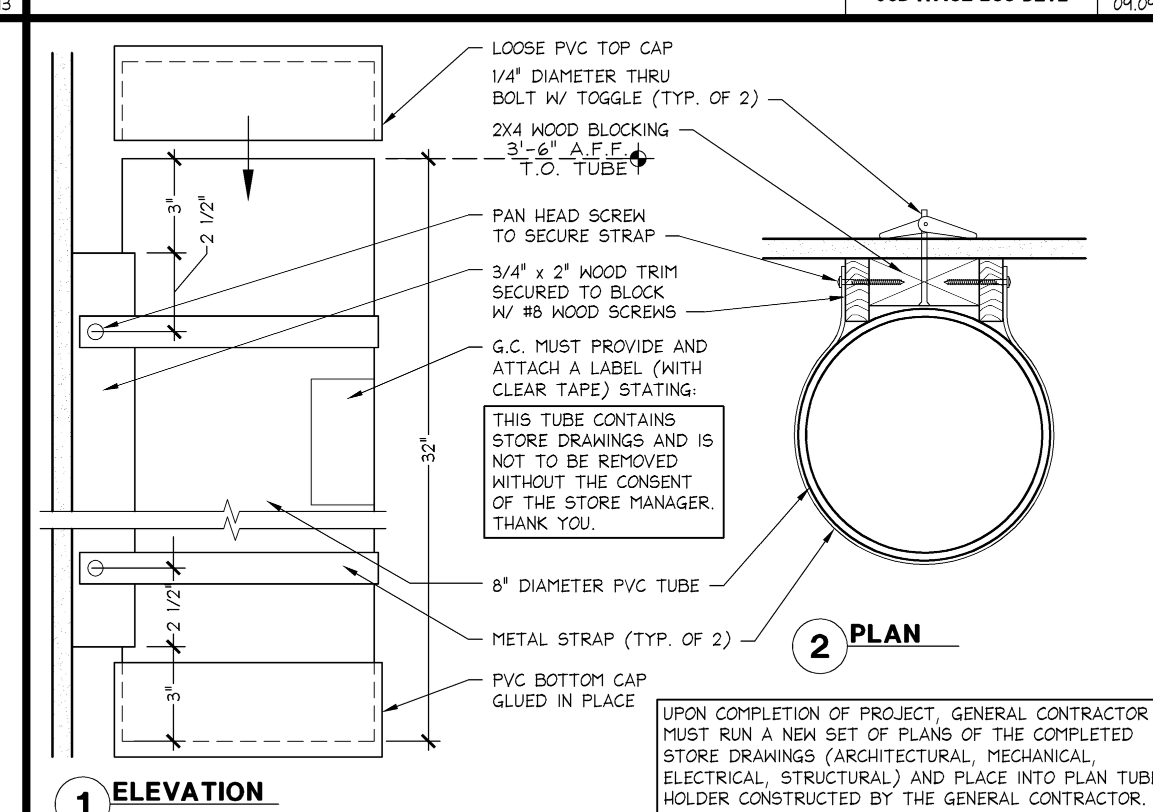

PLAN TUBE HOLDER — 3" = 1'-0" — A — 05D-A1402-A00-DETL — 09.09.13

GreenbergFarrow
1430 West Peachtree Street NW
Suite 200
Atlanta, GA 30309
t: 404 601 4000 f: 404 601 3970

Limitedbrands
LIMITED STORE PLANNING, INC.
d/b/a STORE DESIGN & CONSTRUCTION
Three Limited Parkway · Columbus, Ohio 43230
Telephone: 614.415.7000 · Fax: 614.415.7349

PROHIBITION ON REUSE: THESE DRAWINGS AND SPECIFICATIONS WERE PREPARED FOR USE ON A SPECIFIC SITE CONTEMPORANEOUSLY WITH THEIR ISSUE DATE. THEY ARE NOT INTENDED FOR USE ON A DIFFERENT PROJECT SITE OR AT A LATER TIME. REUSE OF THESE DRAWINGS AND SPECIFICATIONS, OR ANY REPRODUCTION THEREOF, ON ANOTHER PROJECT IS PROHIBITED AND CONTRARY TO LAW UNLESS EXPRESSLY AUTHORIZED IN WRITING BY LIMITED STORE PLANNING, INC., D/B/A LIMITED STORE DESIGN AND CONSTRUCTION ("LSDC").
THESE DRAWINGS AND SPECIFICATIONS ARE THE PROPERTY OF LSDC AND SHALL NOT BE DISPLAYED IN ANY MANNER OR USED ON ANY OTHER PROJECT EXCEPT BY WRITTEN AGREEMENT WITH LSDC. NO REPRODUCTION OF THESE DRAWINGS AND SPECIFICATIONS SHALL BE MADE WITHOUT THE WRITTEN AUTHORIZATION OF THE LSDC. ALL ORIGINALS OR REPRODUCTIONS OF THESE DRAWINGS AND SPECIFICATIONS MUST BE RETURNED TO LSDC UPON COMPLETION OF THEIR INTENDED USE, UNLESS OTHERWISE AGREED BY THE LSDC.
COPYRIGHT NOTICE: THESE DRAWINGS AND SPECIFICATIONS ARE COPYRIGHTED AND SUBJECT TO COPYRIGHT PROTECTION AS AN "ARCHITECTURAL WORK" UNDER SEC. 102 OF THE COPYRIGHT ACT, 17 U.S.C. AS AMENDED DECEMBER 1990, KNOWN AS THE ARCHITECTURAL WORKS COPYRIGHT PROTECTION ACT OF 1990. THE PROTECTION INCLUDES, WITHOUT LIMITATION, THE OVERALL FORM, ARRANGEMENT AND COMPOSITION OF SPACES, AND ELEMENTS OF THE DESIGN. UNDER SUCH PROTECTION, UNAUTHORIZED USE OF THESE DRAWINGS AND SPECIFICATIONS MAY RESULT IN CESSATION OF CONSTRUCTION, BUILDING SEIZURE, AND/OR MONETARY LIABILITY.

PROJECT INFORMATION:

010501726

PINK VICTORIA'S SECRET

FAYETTE MALL
3401 NICHOLASVILLE RD
SPACE # I-904
LEXINGTON, KY 40503

SCOPE:	NEW
PACKAGE:	A
DESIGN TYPE:	PINK
GENERATION:	151Sa
LSD&C PROJECT #:	00062007
A/E PROJECT #:	20140534

REVISIONS:

REQUIRED BY: DATE

ELITE CONSTRUCTION GROUP
LAKE JACKSON, TX
PHONE: 979-285-0712
NOTE: THESE PRINTS HAVE BEEN REDUCED BY 50 PERCENT. SCALE WILL BE 50 PERCENT OF WHAT IS NOTED ON PLANS

DATE ISSUED:	09-05-2014
DESIGNED BY:	APL
DRAWN BY:	AS
CHECKED BY:	AJD

NON-SALES/ AMENITY DETAILS

DRAWING NUMBER:

A14.02